EXHIBIT B: DEVELOPMENT PLAN

ZC#22-014

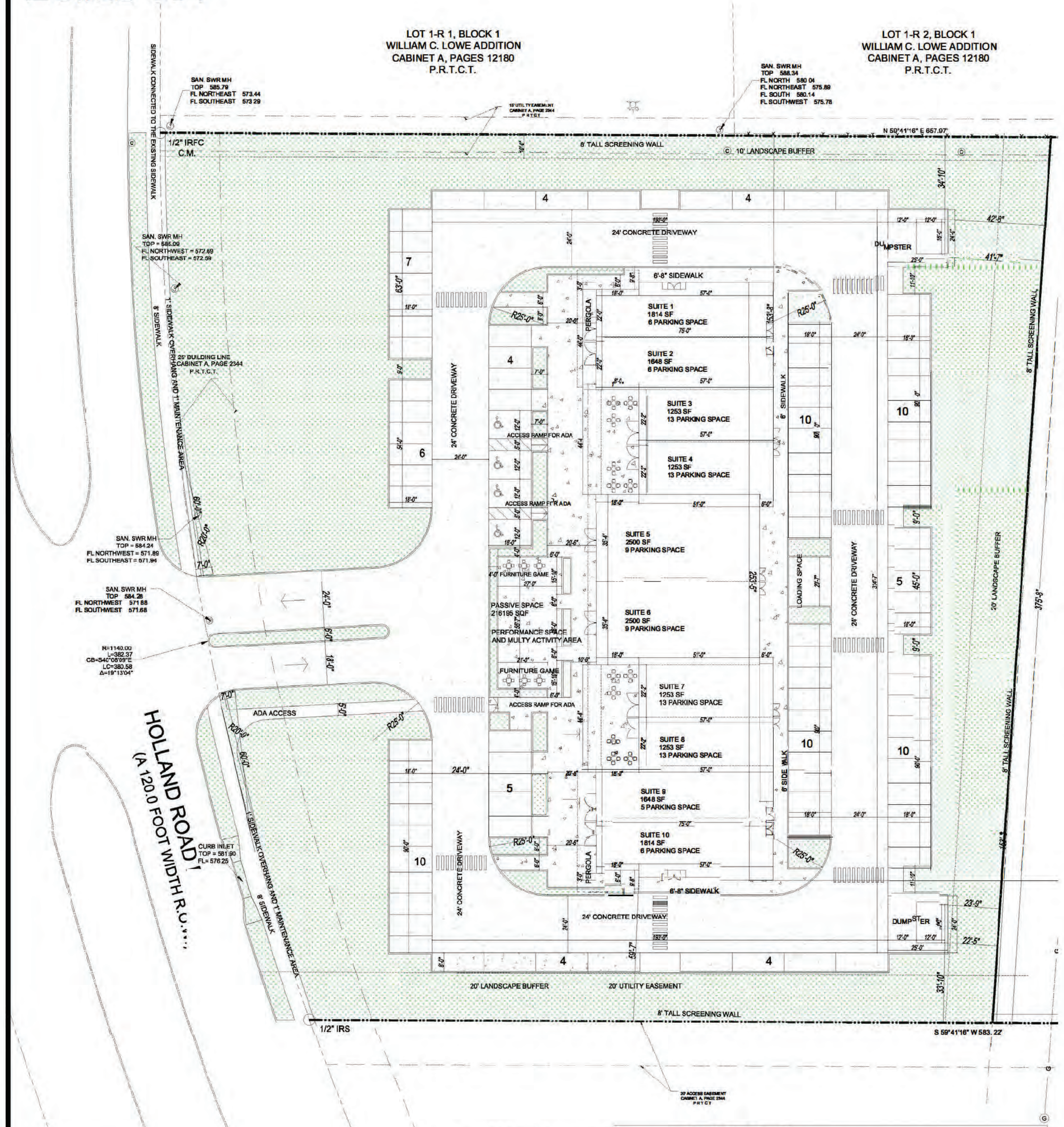
LOT 1-R 1, BLOCK 1
WILLIAM C. LOWE ADDITION
CABINET A, PAGES 12180
P.R.T.C.T.
LOT 1-R 2, BLOCK 1
WILLIAM C. LOWE ADDITION
CABINET A, PAGES 12180
P.R.T.C.T.
SAN. SWR MH TOP 585.79 FL NORTHEAST 573.44 FL SOUTHEAST 573.29
SAN. SWR MH TOP 588.34 FL NORTH 580.04 FL NORTHEAST 575.89 FL SOUTH 580.14 FL SOUTHWEST 575.78
15' UTILITY EASEMENT CABINET A, PAGE 2344 P.R.T.C.T.
N 59°41'16" E 657.97'
SIDEWALK CONNECTED TO THE EXISTING SIDEWALK
1/2" IRFC C.M.
8' TALL SCREENING WALL
10' LANDSCAPE BUFFER
SAN. SWR MH TOP = 585.09 FL NORTHWEST = 572.69 FL SOUTHEAST = 572.59
8' SIDEWALK
1' SIDEWALK OVERHANG AND 1' MAINTENANCE AREA
25' BUILDING LINE CABINET A, PAGE 2344 P.R.T.C.T.
24' CONCRETE DRIVEWAY
6'-8" SIDEWALK
DUMPSTER
PERGOLA
SUITE 1 1814 SF 6 PARKING SPACE
SUITE 2 1648 SF 6 PARKING SPACE
SUITE 3 1253 SF 13 PARKING SPACE
SUITE 4 1253 SF 13 PARKING SPACE
SUITE 5 2500 SF 9 PARKING SPACE
SUITE 6 2500 SF 9 PARKING SPACE
SUITE 7 1253 SF 13 PARKING SPACE
SUITE 8 1253 SF 13 PARKING SPACE
SUITE 9 1648 SF 5 PARKING SPACE
SUITE 10 1814 SF 6 PARKING SPACE
ACCESS RAMP FOR ADA
FURNITURE GAME
PASSIVE SPACE 216195 SQF
PERFORMANCE SPACE AND MULTY ACTIVITY AREA
LOADING SPACE
6' SIDEWALK
20' LANDSCAPE BUFFER
8' TALL SCREENING WALL
375'-8"
SAN. SWR MH TOP = 584.24 FL NORTHWEST = 571.89 FL SOUTHEAST = 571.94
SAN. SWR MH TOP 584.28 FL NORTHWEST 571.88 FL SOUTHWEST 571.68
R=1140.00 L=382.37 CB=S40°08'09"E LC=380.58 Δ=19°13'04"
ADA ACCESS
HOLLAND ROAD
(A 120.0 FOOT WIDTH R.O.W.)
CURB INLET TOP = 581.90 FL= 576.25
20' LANDSCAPE BUFFER
20' UTILITY EASEMENT
8' TALL SCREENING WALL
1/2" IRS
S 59°41'16" W 583. 22'
20' ACCESS EASEMENT CABINET A, PAGE 2344 P.R.T.C.T.

LOT 2, BLOCK 1
R.W. ROBERTS ADDITION
CABINET A, PAGES 2344
P.R.T.C.T.

	PAVEMENT LEGEND
▨	4"-3000 PSI REINFORCED CONCRETE SIDEWALK
	6"-3.500 PSI REINFORCED CONCRETE ON STABILIZED SUBGRADE
	GREEN AREA

N

SCALE: 1/32" =1'

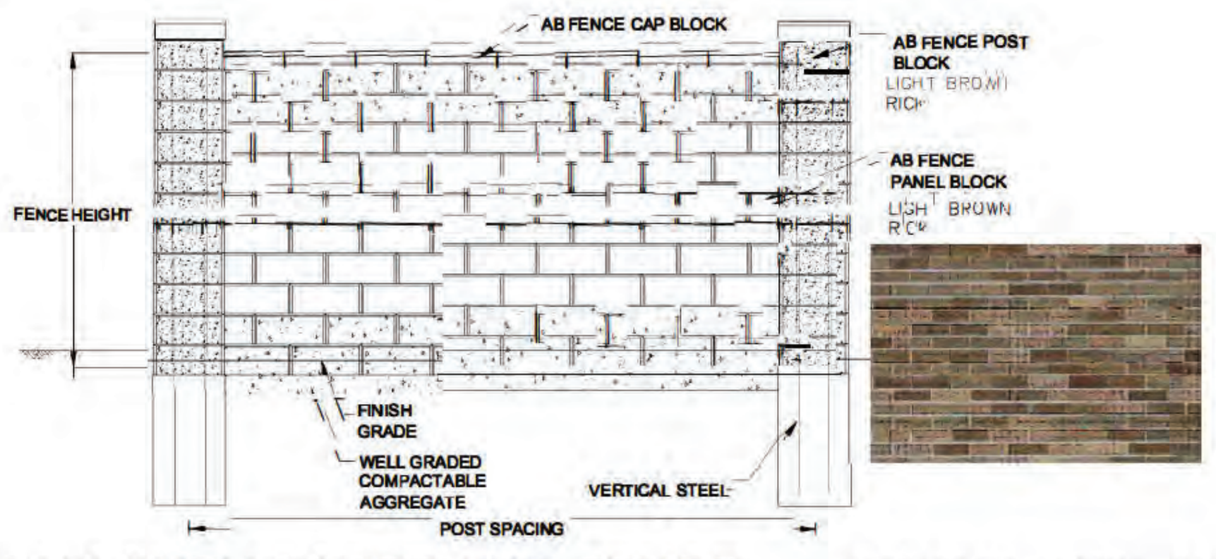
AB FENCE CAP BLOCK
AB FENCE POST BLOCK
LIGHT BROWN RICK
AB FENCE PANEL BLOCK
LIGHT BROWN RICK
FENCE HEIGHT
FINISH GRADE
WELL GRADED COMPACTABLE AGGREGATE
VERTICAL STEEL
POST SPACING

MASONRY SCREENING FENCE SCALE: 1/4" =1'

HOLLAND
BROAD
GRAND MEADOW BLVD
SITE
CANNON
DAVIS

VICINITY MAP
SCALE:1:200

DEVELOPMENT STANDARDS:

(A) EXTERIOR CONSTRUCTION MATERIALS FOR DEVELOPMENT IN THIS PLANNED DEVELOPMENT (PD):

(1) IN THE PD DISTRICT THE EXTERIOR SURFACES OF ALL STRUCTURES, INCLUDING SCREENING WALLS, WING WALLS, COLUMNS AND SUPPORTS, SHALL CONSIST OF AT LEAST 70% MASONRY CONSTRUCTION MATERIALS. THIS REQUIREMENT SHALL APPLY TO NEW STRUCTURES, EXPANSION OF EXISTING STRUCTURES, AND ANY REPAIR OR ALTERATION THAT INVOLVES MORE THAN 50% OF THE EXTERIOR SURFACES OF AN EXISTING STRUCTURE. THIS REQUIREMENT SHALL NOT APPLY TO ROOFS, AWNINGS, CANOPIES, DOORS, WINDOWS, GLASS WALLS AND FRAME ASSEMBLIES THEREOF. THE REMAINING 30% OF THE EXTERIOR SURFACES MAY BE CONSTRUCTED OF MASONRY-LIKE CONSTRUCTION MATERIALS OR ANY CONSTRUCTION MATERIALS NOT EXPRESSLY PROHIBITED BY THIS SECTION.

(2) MASONRY CONSTRUCTION MATERIALS AND MASONRY-LIKE CONSTRUCTION MATERIALS ARE AS DEFINED IN § 155.012.

(3) THE EXTERIOR WALL SURFACES OF ALL NEW STRUCTURES SHALL BE CONSTRUCTED OF AT LEAST TWO MATERIALS THAT COMPLEMENT EACH OTHER AND ARE CONSISTENT IN STYLE.

(4) THE FOLLOWING CONSTRUCTION MATERIALS SHALL BE PROHIBITED ON THE EXTERIOR WALL SURFACES OF ALL STRUCTURES:

(A) VINYL OR ALUMINUM SIDING.

(B) PLASTIC OR FIBERGLASS PANELS.

(C) UNFIRED OR UNDERFIRED CLAY, BRICK, OR OTHER MASONRY PRODUCT.

(D) CORRUGATED, RIBBED OR STANDING-SEAMED METAL PANELS.

(E) GALVANIZED OR ALUMINUM COATED METAL CLADDING.

(F) SMOOTH, UNFINISHED OR UNTEXTURED CONCRETE MASONRY UNITS OR CONCRETE WALLS; OR

(G) REFLECTIVE GLASS.

(5) ANY DAMAGE TO THE EXTERIOR SURFACES OF A STRUCTURE SHALL BE REPAIRED WITHIN 120 DAYS FROM THE DATE THE DAMAGE OCCURS.

(6) EXISTING STRUCTURES SHALL BE LAWFUL NONCONFORMING BUILDINGS OR STRUCTURES.

(7) DEVIATION FROM THE ABOVE REQUIREMENT MAY BE ACCOMPLISHED ONLY THROUGH PLANNED DEVELOPMENT ZONING.

(8) FACILITIES OR DEVELOPMENT ON PROPERTY OWNED AND USED BY THE CITY OF MANSFIELD AND THE MANSFIELD INDEPENDENT SCHOOL DISTRICT ARE EXEMPT FROM THE MASONRY MATERIALS REQUIREMENTS OF THIS SECTION.

(9) WHEN ALL OTHER CONDITIONS ARE MET, INDUSTRIALIZED BUILDINGS FOR PRIVATE SCHOOLS AND CHURCHES ARE PERMITTED WITHOUT MASONRY CONSTRUCTION MATERIALS AS LONG AS THE TOTAL FLOOR AREA OF THE INDUSTRIALIZED BUILDINGS DOES NOT EXCEED 35% OF THE TOTAL FLOOR AREA OF THE PRIMARY STRUCTURE.

(B) ARCHITECTURAL ATTRIBUTES FOR NON-RESIDENTIAL DEVELOPMENT FOR DEVELOPMENT IN THIS PLANNED DEVELOPMENT (PD):

(1) ARCHITECTURAL ATTRIBUTES ARE INTENDED TO ADDRESS THE VISUAL IMPACT OF LONG UNINTERRUPTED WALLS OR ROOFLINES BY PROVIDING A MINIMUM AMOUNT OF VARIATIONS ACCORDING TO THE SIZE OF THE STRUCTURE.

(2) WHERE TERMS ARE NOT DEFINED, THEY SHALL HAVE THEIR ORDINARY ACCEPTED MEANINGS WITHIN THE CONTEXT WITH WHICH THEY ARE USED.

(3) ALL NON-RESIDENTIAL BUILDINGS SHALL BE ARCHITECTURALLY FINISHED ON ALL FOUR SIDES WITH THE SAME MATERIALS, DETAILING (E.G., TILES, AWNINGS, MOLDINGS, CORNICES, ETC.) AND FEATURES (E.G., WINDOWS, OPENINGS, COLUMNS, TOWERS, ARCHES, ETC.).

(4) ALL NON-RESIDENTIAL BUILDINGS WITH FACADES GREATER THAN 100 FEET IN LENGTH SHALL INCORPORATE WALL PLANE PROJECTIONS OR RECESSES THAT ARE AT LEAST FOUR FEET DEEP. PROJECTIONS/RECESSES MUST BE AT LEAST FOUR FEET IN LENGTH. NO UNINTERRUPTED LENGTH OF FACADE MAY EXCEED 50 FEET IN LENGTH.

(5) ALL NON-RESIDENTIAL BUILDINGS WITH FLAT ROOF PLANES GREATER THAN 100 FEET IN LENGTH SHALL INCORPORATE VARIATIONS IN THE HEIGHT OF THE ROOF PLANE THAT DIFFER BY AT LEAST TWO FEET IN HEIGHT. VARIATIONS TO FLAT ROOF PLANES MAY INCLUDE PILASTERS AND PROJECTED OR RAISED ENTRY FEATURES. NO UNINTERRUPTED LENGTH OF ANY FLAT ROOF PLANE MAY EXCEED 50 FEET IN LENGTH.

(6) ALL NON-RESIDENTIAL BUILDING FACADES SHALL INCLUDE A REPEATING PATTERN OF ELEMENTS SUCH AS MATERIAL MODULE CHANGE, COLORS OR TEXTURES. AT LEAST ONE OF THESE ELEMENTS SHALL REPEAT HORIZONTALLY.

(7) ALL NON-RESIDENTIAL BUILDINGS SHALL BE DESIGNED TO INCLUDE NO LESS THAN FOUR OF THE ARCHITECTURAL ELEMENTS FROM THE LIST BELOW. BUILDINGS OVER 20,000 SQUARE FEET MUST INCLUDE A MINIMUM OF SIX OF THE ARCHITECTURAL ELEMENTS LISTED BELOW.

(A) CANOPIES, AWNINGS, ARCADES, COVERED WALKWAYS OR PORTICOES.

(B) RECESSES/PROJECTIONS, COLUMNS, PILASTERS PROJECTING FROM THE PLANE.

(C) VARIED ROOF HEIGHTS FOR PITCHED, PEAKED, SLOPED OR FLAT ROOF STYLES.

(D) ARTICULATED CORNICE LINE.

(E) ARCHES.

(F) DISPLAY WINDOWS, FAUX WINDOWS, OR DECORATIVE WINDOWS.

(G) ARCHITECTURAL DETAILS (SUCH AS TILE WORK AND MOLDING) OR ACCENT MATERIALS INTEGRATED INTO THE BUILDING FACADE.

(H) INTEGRATED PLANTERS OR WING WALLS THAT INCORPORATE LANDSCAPING AND SITTING AREAS OR OUTDOOR PATIOS.

(I) OFFSETS, REVEALS OR PROJECTING RIBS USED TO EXPRESS ARCHITECTURAL OR STRUCTURAL BAYS; OR

(J) OTHER ARCHITECTURAL FEATURES APPROVED BY THE DIRECTOR OF PLANNING.

(8) EXISTING STRUCTURES THAT WERE LAWFUL BEFORE SEPTEMBER 14, 2004, BUT WHICH DO NOT CONFORM TO THE REGULATIONS OF THIS CHAPTER AFTER ITS PASSAGE, SHALL BE LAWFUL NON-CONFORMING BUILDINGS OR STRUCTURES.

(9) ALL NEW STRUCTURES OR EXPANSION OF EXISTING STRUCTURES SHALL COMPLY WITH THE REQUIREMENTS IN THIS SECTION. ANY REPAIR OR ALTERATION THAT INVOLVES MORE THAN 50% OF THE EXTERIOR SURFACES OF AN EXISTING STRUCTURE SHALL COMPLY WITH THE REQUIREMENTS IN THIS SECTION.

(10) DEVIATION FROM THE ABOVE REQUIREMENTS MAY BE ACCOMPLISHED ONLY THROUGH PLANNED DEVELOPMENT ZONING.

ALL SIGNAGE WILL COMPLY WITH REGULATIONS FOR C 2 ZONED PROPERTY AS SPECIFIED IN SECTION 155.090 SIGN STANDARDS.

ALL PARKING SPACES WILL COMPLY WITH REGULATIONS FOR C 2 ZONED PROPERTY AS SPECIFIED IN SECTION 155.091 OFF STREET PARKING AND LOADING STANDARDS.

THE WALK ABILITY REQUIREMENT WITHIN SECTION 155.092 OF THE ZONING ORDINANCE IS MET. SIDEWALK WIDTH, CONSTRUCTION MATERIALS AND HOW THE WALK OR PATHWAYS SHALL BE INTEGRATED WITHIN THE LANDSCAPE PLAN ARE ALL PER SECTION 155.092.

ALL NEW DEVELOPMENTS DEDICATE A MINIMUM TEN (10) PERCENT OF THE TOTAL BUILDING FLOOR AREA TO PASSIVE SPACE PER SECTION 155.092 OF THE ZONING ORDINANCE.

THE PIPELINE AREA WILL NEED TO BE INCORPORATED INTO THE RESIDENTIAL LOTS FOR MAINTENANCE

ALL WINDOWS FOR THE COMMERCIAL DEVELOPMENT THAT ARE NOR PART OF DOORWAYS SHALL BE SHOPFRONT STYLE AND NOT EXTEND TO THE FINISHED GRADE. THE BULKHEADS (KNEEWALLS) SHALL BE BELOW THE WINDOWS AND DESIGNED TO A HEIGHT BETWEEN 24 AND 36 INCHES IN HEIGHT.

ALLOWED USES: THE FOLLOWING COMMERCIAL USES SHALL BE PERMITTED:

A. RETAIL, PROVIDED THAT THE SPECIFIC USE SHALL BE FURTHER LIMITED TO:
  I. APPAREL STORE.
  II. ARTS AND CRAFTS STORE.
  III. BAKERY (NO DRIVE THROUGH FACILITY).
  IV. BIKE SHOP.
  V. Cafe (NO DRIVE THROUGH FACILITY).
  VI. COFFEE SHOP (NO DRIVE THROUGH FACILITY).
  VII. CORNER MARKET OR CONVENIENCE GOODS STORE PROVIDED THAT:
    - A MINIMUM OF 40 PERCENT OF ITS RETAIL SALES AND DISPLAY AREA SHALL BE DEDICATED EXCLUSIVELY TO THE SALE OF A GENERAL LINE OF FOOD AND BEVERAGES THAT ARE INTENDED FOR HOME PREPARATION AND CONSUMPTION.
    - A MINIMUM OF 20 PERCENT OF ITS RETAIL SPACE AND DISPLAY AREA SHALL BE DEDICATED EXCLUSIVELY TO THE SALE OF PERISHABLE GOODS INCLUDING DAIRY, FRESH PRODUCE, FRESH MEATS, POULTRY, FISH AND FROZEN FOODS.
    - A MAXIMUM 10 PERCENT OF ITS RETAIL SPACE AND DISPLAY AREA OF THE CORNER MARKET MAY BE DEVOTED TO THE SALE OF ALCOHOL FOR OFF SITE CONSUMPTION; AND
    - THE RETAIL SALE OF DISCOUNT AND USED MERCHANDISE IS EXPRESSLY PROHIBITED.
  VIII. FLORIST.
  IX. GIFT STORE.
  X. HARDWARE STORE.
  XI. ICE CREAM PARLOR (NO DRIVE THROUGH FACILITY).
  XII. JEWELRY STORE.
  XIII. PET SUPPLIES STORE.
  XIV. PHARMACY (NO DRIVE THROUGH FACILITY).
  XV. RESTAURANT (NO DRIVE THROUGH FACILITY).
  XVI. MOBILE FOOD VENDOR.
B. PERSONAL SERVICE, PROVIDED THAT THE SPECIFIC USE SHALL BE FURTHER LIMITED TO:
  I. BARBER.
  II. DAY SPA.
  III. DRY CLEANER (NO DRIVE THROUGH FACILITY).
  IV. FITNESS STUDIO.
  V. HAIRDRESSER.
  VI. PET GROOMING.
  VII. SALON.
  VIII. SHOE REPAIR.
  IX. TAILOR.
C. OFFICE.
D. MEDICAL CLINIC.
E. VETERINARIAN OFFICE (WITHOUT OUTSIDE ANIMAL RUN OR PENS).
F. MAIL CENTER (MAY BE LOCATED WITHIN OR ADJACENT TO CORNER MARKET OR CONVENIENCE GOODS STORE OR FOOD SERVICE ESTABLISHMENT).

SITE DATA

REZONED LOT AREA		128968 SQF (2.9 ACRES)
CURRENT ZONING		SF-12-22
PROPOSED ZONING		PD
CURRENT USE		UNDERDEVELOPED
PROPOSED USE		COMMERCIAL
MAIN BUILDING AREA		16936 SQF
DUMPSTER AREA		384 SQF
LOT COVERAGE		(16936+384)/128968=0.134(13.5 %)
GREEN AREA		51711 (51711/128968= 40.1%)
PARKING AND DRIVE WAY AREA		44802 (44802/128968= 34.7%)
SIDEWALK AREA		15135 (15135/128968= 11.7%)
PROPOSED PARKING SPACES		93 + 4 HP
BUILDING HEIGHT		28'
SETBACK	FRONT SIDE	140'-5"
	REAR SIDE	96'-6"
	RIGHT SIDE	59'-7"
	LEFT SIDE	61'-10"

PARKING CALCULATION

Number of Building	Uses	Building Area	Space		Provided Spaces
			Ratio	Required	
1	Listed	16936	1:300 see note 1.	47	93
			1:250 see note 2.	12	

Notes:
1. Per zoning ordinance this ratio is applicable for the first 3000 SQ.FT. of the building area
2. Per zoning ordinance this ratio is applicable for the building area over 3000 SQ.FT.

REVISIONS

NO.	DATE
1	
2	
3	
4	
5	
6	
7	

DESIGNED: OMID ESMAEILI
DRAWN: OMID ESMAEILI
CHECKED:
DATE:
SCALE : SEE PLAN

DEVELOPER:
SOIL ENGINEER:
DATE
REPORT#

PLANS PREPARED BY:
1020 Ventures Group
1020 Ventures LLC
713 W Park Row Drive, Arlington TX 76018
682-716-5724

ENGINEERING SOLVER
26895 Aliso Creek Rd, Suite B633
Aliso Viejo, CA 92656
TEL: (949) 2287282

ARCHITECT:
LICENSE NO. EXP DATE

700 N HOLLAND RD, MANSFELD, TX

DEVELOPMENT PLAN
RAHHAL ESTATES COMMERCIAL
2.960 acres
CITY OF MANSFIELD, TARRANT COUNTRY, TEXAS
DATE OF PREPARATON:2022-12-8

PLAN CHECK:
PERMIT:

SHEET NO
DP-1

EXHIBIT B (cont): DUMPSTER DETAIL ZC#22-014

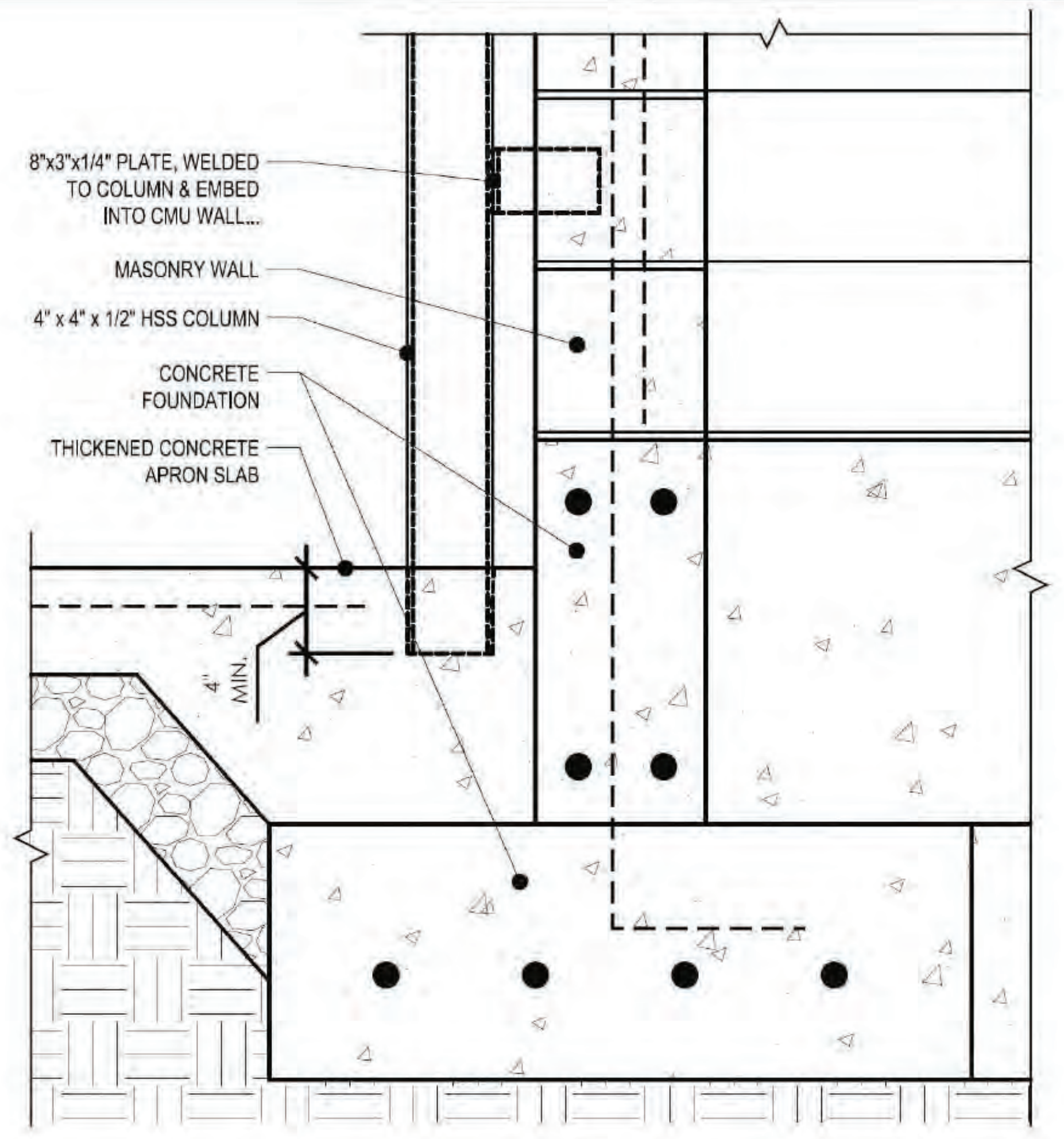
8"x3"x1/4" PLATE, WELDED TO COLUMN & EMBED INTO CMU WALL...
MASONRY WALL
4" x 4" x 1/2" HSS COLUMN
CONCRETE FOUNDATION
THICKENED CONCRETE APRON SLAB
4" MIN.

⑧ COLUMN BASE DETAIL

SCALE: 1 1/2" = 1'-0"

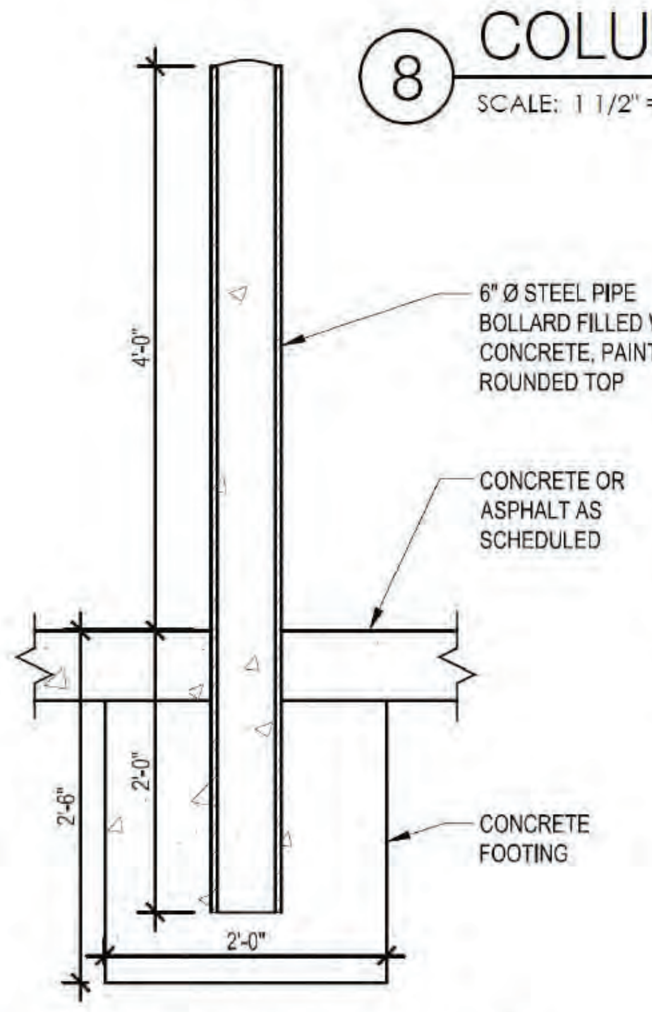
4'-0"
2'-0"
2'-6"
2'-0"
6" Ø STEEL PIPE BOLLARD FILLED W/ CONCRETE, PAINTED, ROUNDED TOP
CONCRETE OR ASPHALT AS SCHEDULED
CONCRETE FOOTING

⑦ BOLLARD DETAIL

SCALE: 3/4" = 1'-0"

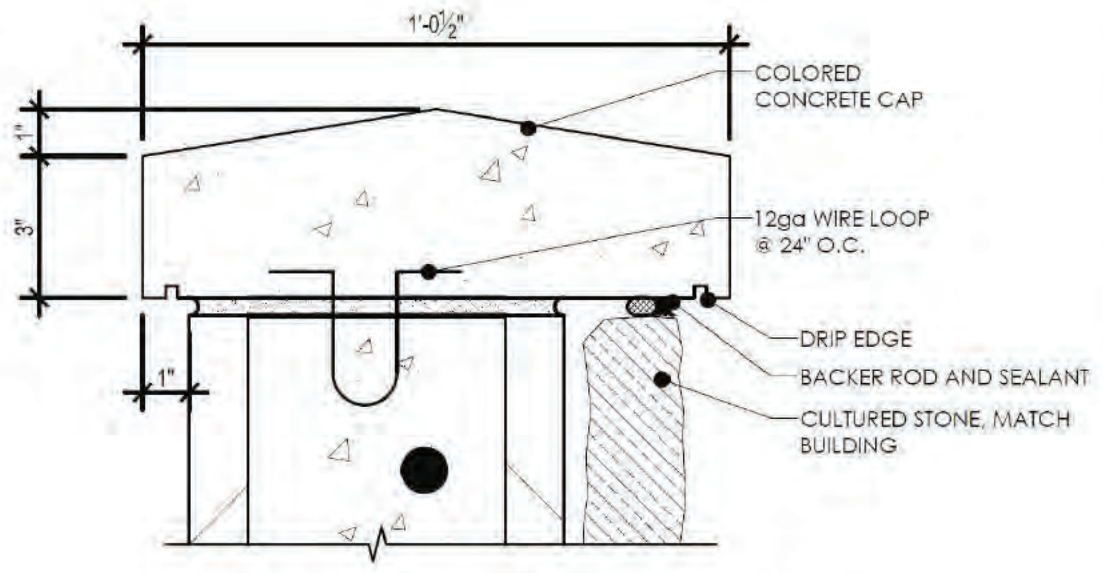
1'-0½"
1"
3"
1"
COLORED CONCRETE CAP
12ga WIRE LOOP @ 24" O.C.
DRIP EDGE
BACKER ROD AND SEALANT
CULTURED STONE, MATCH BUILDING

⑥ CONCRETE CAP DETAIL

SCALE: 3" = 1'-0"

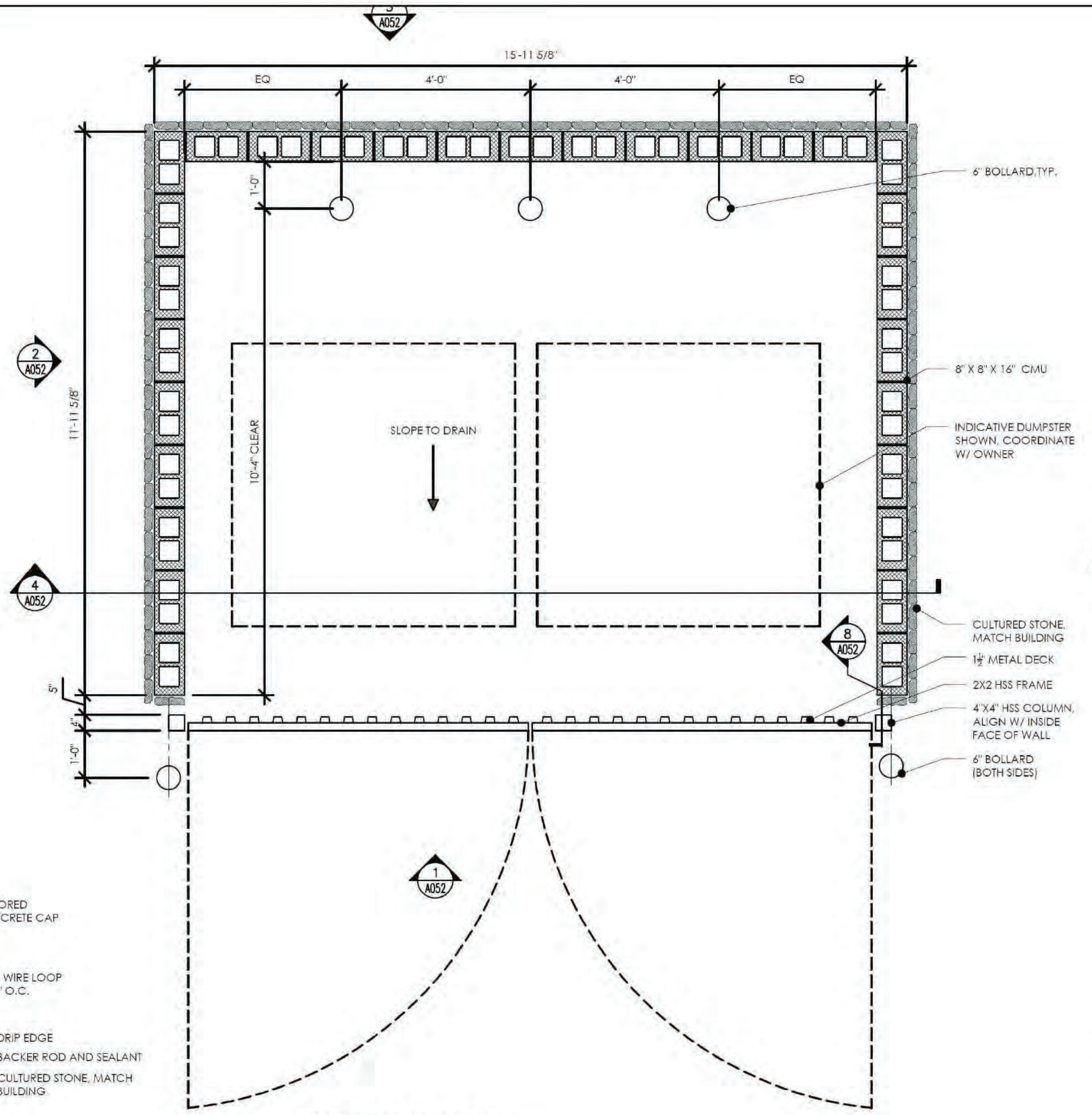
3
A052
15'-11 5/8"
EQ
4'-0"
4'-0"
EQ
1'-0"
11'-11 5/8"
10'-4" CLEAR
2
A052
4
A052
8
A052
1
A052
SLOPE TO DRAIN
5"
4"
1'-0"
6" BOLLARD,TYP.
8" X 8" X 16" CMU
INDICATIVE DUMPSTER SHOWN, COORDINATE W/ OWNER
CULTURED STONE, MATCH BUILDING
1½" METAL DECK
2X2 HSS FRAME
4"X4" HSS COLUMN, ALIGN W/ INSIDE FACE OF WALL
6" BOLLARD (BOTH SIDES)

⑤ FLOOR PLAN

SCALE: 1/2" = 1'-0"

GENERAL NOTES:
FOR DUMPSTER LOCATIONS SEE CIVIL SHEETS

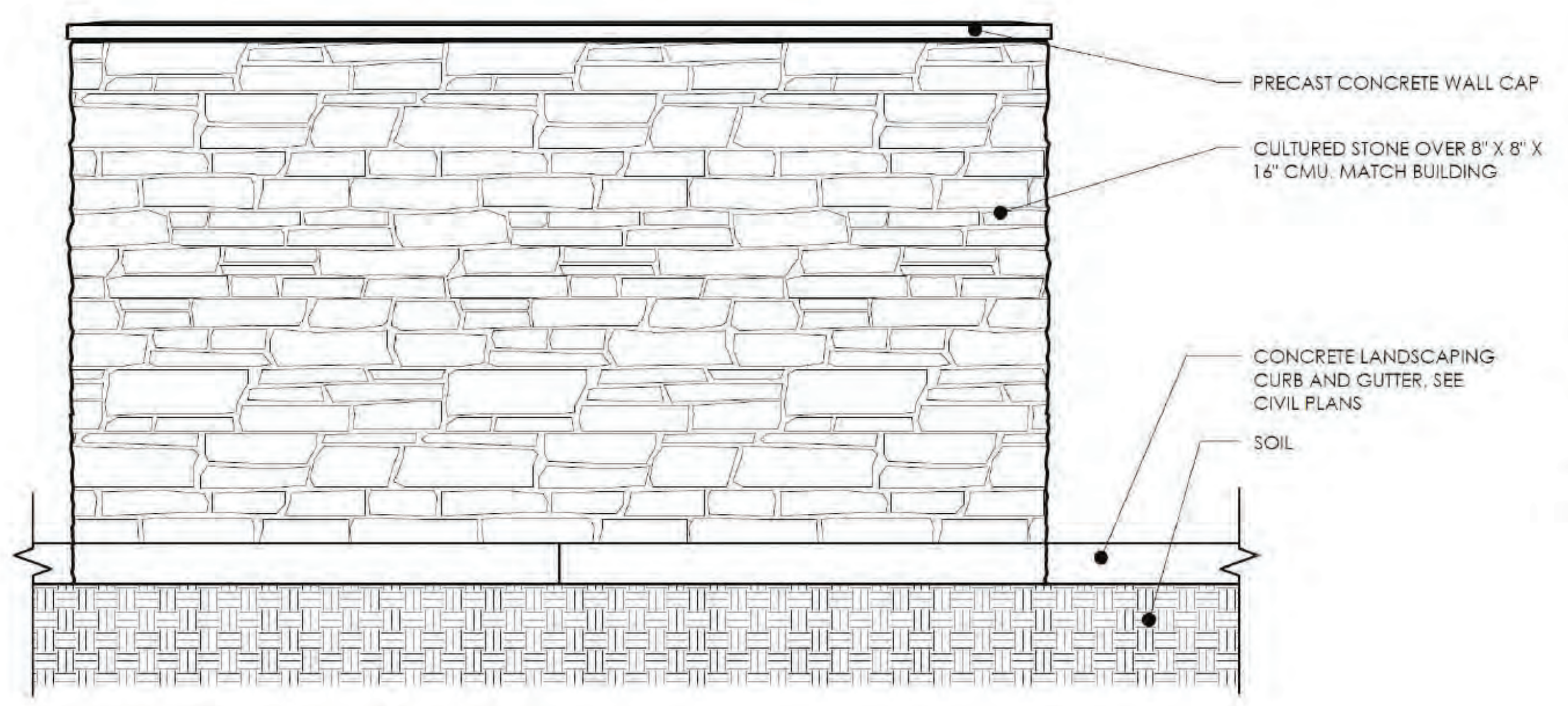
PRECAST CONCRETE WALL CAP
CULTURED STONE OVER 8" X 8" X 16" CMU, MATCH BUILDING
CONCRETE LANDSCAPING CURB AND GUTTER, SEE CIVIL PLANS
SOIL

③ REAR ELEVATIONS

SCALE: 1/2" = 1'-0"

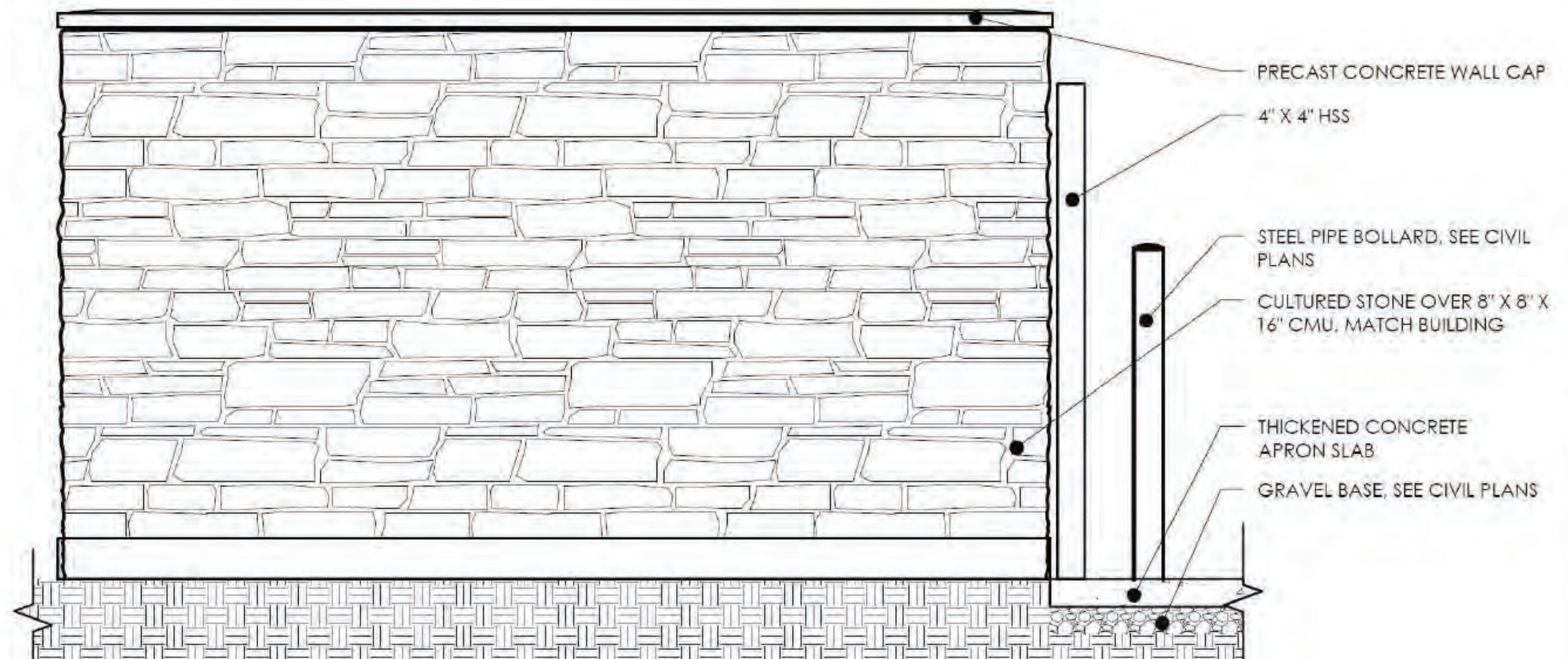
PRECAST CONCRETE WALL CAP
4" X 4" HSS
STEEL PIPE BOLLARD, SEE CIVIL PLANS
CULTURED STONE OVER 8" X 8" X 16" CMU, MATCH BUILDING
THICKENED CONCRETE APRON SLAB
GRAVEL BASE, SEE CIVIL PLANS

② SIDE ELEVATIONS

SCALE: 1/2" = 1'-0"

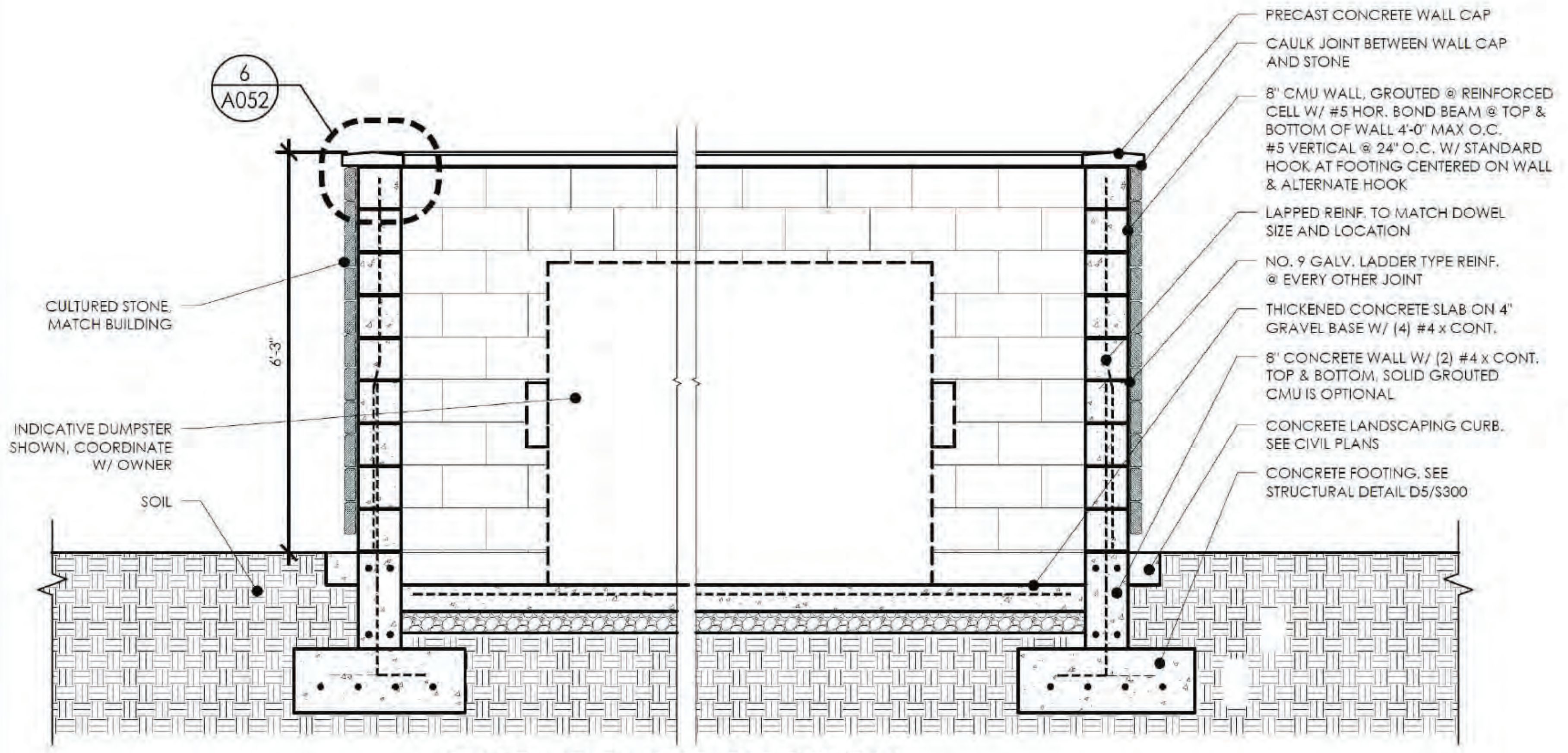
6
A052
6'-3"
CULTURED STONE, MATCH BUILDING
INDICATIVE DUMPSTER SHOWN, COORDINATE W/ OWNER
SOIL
PRECAST CONCRETE WALL CAP
CAULK JOINT BETWEEN WALL CAP AND STONE
8" CMU WALL, GROUTED @ REINFORCED CELL W/ #5 HOR. BOND BEAM @ TOP & BOTTOM OF WALL 4'-0" MAX O.C. #5 VERTICAL @ 24" O.C. W/ STANDARD HOOK AT FOOTING CENTERED ON WALL & ALTERNATE HOOK
LAPPED REINF. TO MATCH DOWEL SIZE AND LOCATION
NO. 9 GALV. LADDER TYPE REINF. @ EVERY OTHER JOINT
THICKENED CONCRETE SLAB ON 4" GRAVEL BASE W/ (4) #4 x CONT.
8" CONCRETE WALL W/ (2) #4 x CONT. TOP & BOTTOM, SOLID GROUTED CMU IS OPTIONAL
CONCRETE LANDSCAPING CURB, SEE CIVIL PLANS
CONCRETE FOOTING, SEE STRUCTURAL DETAIL D5/S300

④ ENCLOSURE SECTION

SCALE: 1/2" = 1'-0"

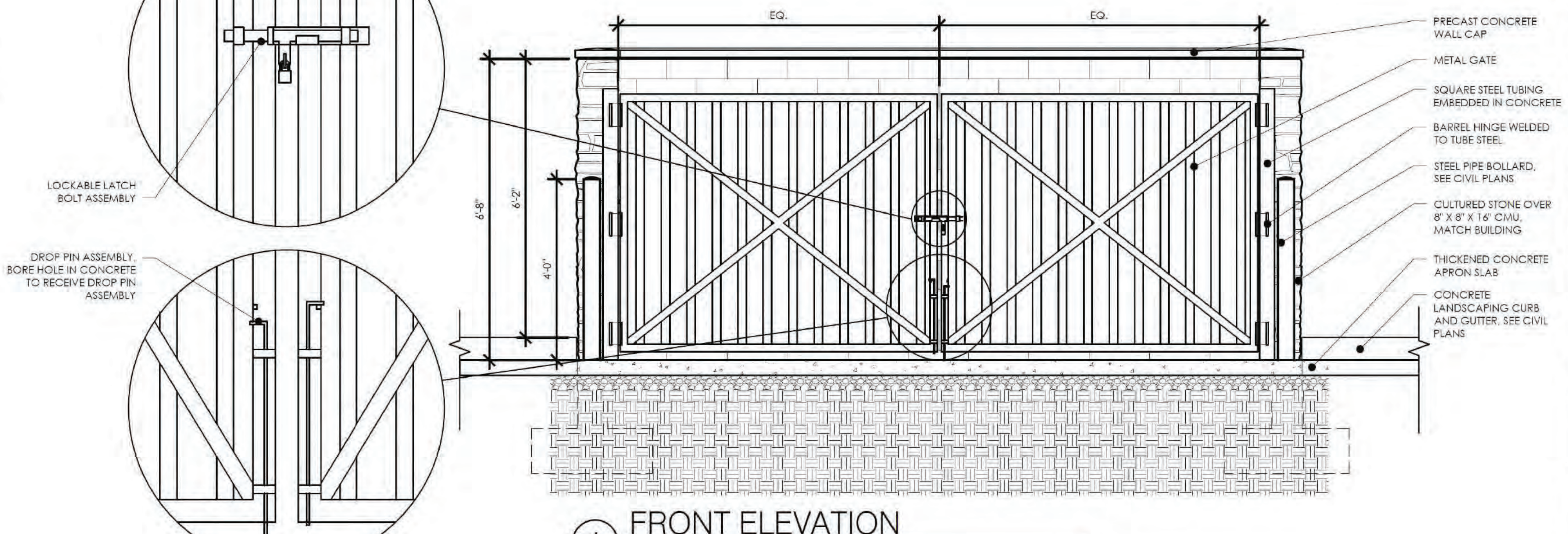
LOCKABLE LATCH BOLT ASSEMBLY
DROP PIN ASSEMBLY, BORE HOLE IN CONCRETE TO RECEIVE DROP PIN ASSEMBLY
EQ.
EQ.
6'-8"
6'-2"
4'-0"
PRECAST CONCRETE WALL CAP
METAL GATE
SQUARE STEEL TUBING EMBEDDED IN CONCRETE
BARREL HINGE WELDED TO TUBE STEEL
STEEL PIPE BOLLARD, SEE CIVIL PLANS
CULTURED STONE OVER 8" X 8" X 16" CMU, MATCH BUILDING
THICKENED CONCRETE APRON SLAB
CONCRETE LANDSCAPING CURB AND GUTTER, SEE CIVIL PLANS

① FRONT ELEVATION

SCALE: 1/2" = 1'-0"

NO.	DATE	REVISIONS
7		
6		
5		
4		
3		
2		
1		

DESIGNED: **OMID ESMAEILI**
DRAWN: **OMID ESMAEILI**
CHECKED:
DATE:
SCALE: **SEE PLAN**

DEVELOPER:
SOIL ENG NEER:
REPORT# DATE

PLANS PREPARED BY:
1020 Ventures Group
1020 Ventures LLC
713 W Park Row Drive, Arlington TX 76018
682-716-5724

ENGINEERING SOLVER
26895 Aliso Creek Rd, Suite B633
Aliso Viejo, CA 92656
TEL (949) 2287282

ARCHITECT:
LICENSE NO. EXP. DATE

700 N HOLLAND RD, MANSFIELD, TX

RAHHAL ESTATES COMMERCIAL
2.960 acres
CITY OF MANSFIELD, TARRANT COUNTRY, TEXAS
DATE OF PREPARATON:2022-12-14

PLAN CHECK:
PERMIT:

SHEET NO
LP-2